REV.	DESCRIPTION	DRAWN	CHECKED	APPROVED
A	NEW RELEASE	LJH 07/01/07'		

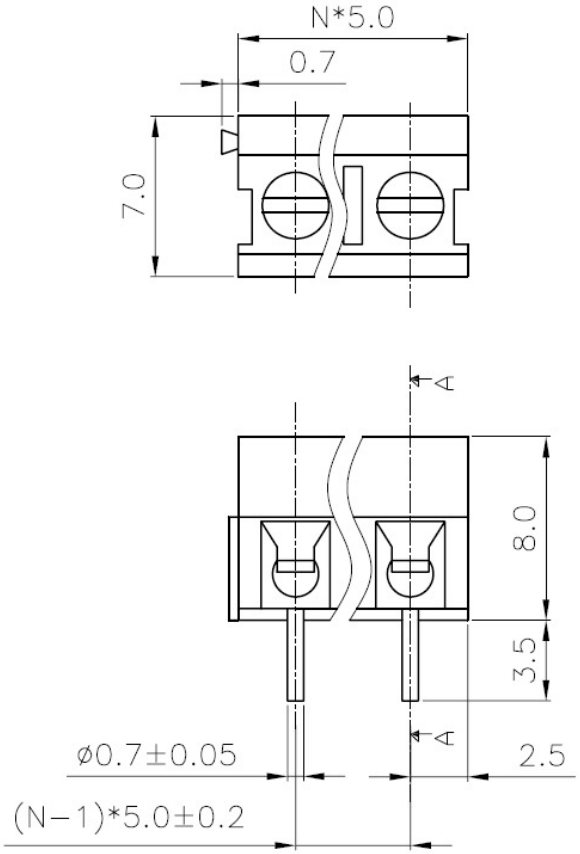

N=Number of contacts

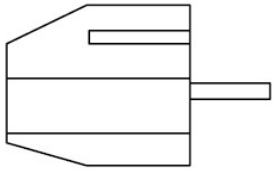

STRAIGHT TYPE

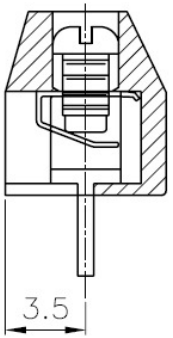

SECTION A−A

- MATERIAL
  SCREWS : M2 STEEL ZINC PLATED
  WIRE GUAED : PHOSPHOR BRONZE NI PLATRD OR STAINLESS STEEL
  PIN HEADER : BRASS, TIN PLATED
  HOUSING : PBT, UL94V−0
- ELECTRICAL
  RATED VOLTAGE : 300V
  RATED CURRENT : 15A
  CONTACT RESISTANCE : 20mΩ
  INSULATION RESISTANCE : 5000MΩ/1000V
  WITHSTANDING VOLTAGE : AC1500V/1Min
  WIRE RANGE : 22−14AWG 2.5mm²
- MECHANICAL
  TEMP.RANGE : −30℃∽+120℃
  MAX SOLDERING : +250℃, FOR 5 SEC.
  TORQUE : 0.5Nm(4.5IB.IN)
  STRIP LENGTH : 4.5−5mm

PRODUCT NUMBER CODE:

F125V − X X

- No.OF CONTACTS: 02 03 08 16
- PITCH5.00MM
- SERIES No.: F125V

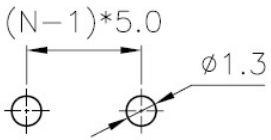

P.C.B.LAYOUT

GENERAL TOLERANCE		ANGLE TOLERANCE	
X.	±0.60	X.	±5°
.X	±0.38	.X	±3°
.XX	±0.25	.XX	±2°

DRAWING TYPE	CUSTOMER		
SCALE	1:1	SHEET	1 OF 1
DRAWING NO.	F125V−XXXXX		

PROJECTION		TITLE	EURO TERMINAL BLOCKS PITCH5.00MM
UNITS	mm		
SHEET SIZE	A4	SERIES	F125V SERIES

TOPTEK

www.toptek-co.com