REV.	DESCRIPTION	DRAWN	CHECKED	APPROVED
A	NEW RELEASE	TYF 06/02/06'		

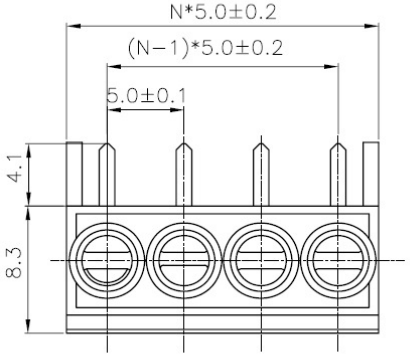

N:NUMBER OF CONTACTS

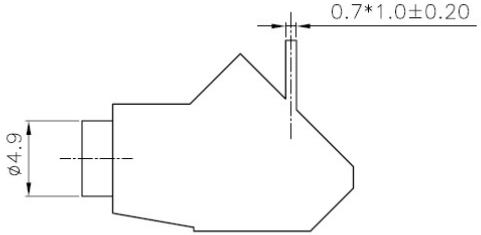

STRAIGHT TYPE

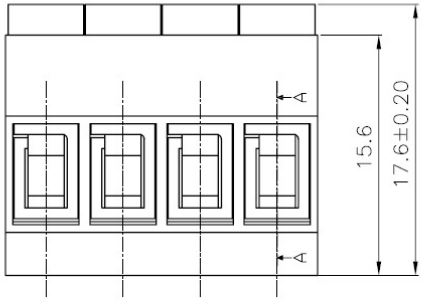

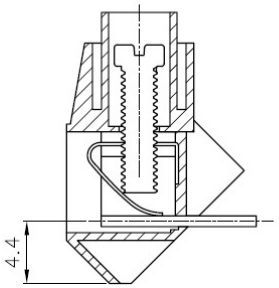

SECTION A−A

Material
- Screws : M2.5 steel Zinc plated
- Contact : Phosphor bronze
- Pin header : Brass, Tin plated
- Housing : PA66, UL94V−0

Electrical
- Rated voltage : 300V
- Rated current : 15A
- Contact resistance : 20mΩ
- Insulation resistance: 5000MΩ/1000V
- Withstanding Voltage : AC1500V/1Min
- Wire range : 26−16AWG 1.5mm²

Mechanical
- Temp.Range : −40℃∽+105℃
- MAX Soldering: +250℃, for 5 Sec.
- Torque : 0.5Nm(4.5Lb.in)
- Strip length : 5−6mm

PRODUCT NUMBER

F168 − X X

NO.OF CONTACTS
02 03 08 16

PITCH5.00

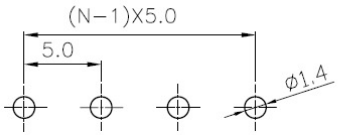

RECOMMEND P.C.B.LAYOUT(TOLERANCE=±0.05)

GENERAL TOLERANCE		ANGLE TOLERANCE	
X.	±0.60	X.	±5°
.X	±0.38	.X	±3°
.XX	±0.25	.XX	±2°

DRAWING TYPE	CUSTOMER		
SCALE	1:1	SHEET	1 OF 1
DRAWING NO.	F168		

PROJECTION		TITLE	EURO TERMINAL BLOCKS PITCH5.00
UNITS	mm		
SHEET SIZE	A4	SERIES	F168 SERIES

TOPTEK

www.toptek-co.com