REV.	DESCRIPTION	DRAWN	CHECKED	APPROVED
A	NEW RELEASE	LJH 06/27/07'		

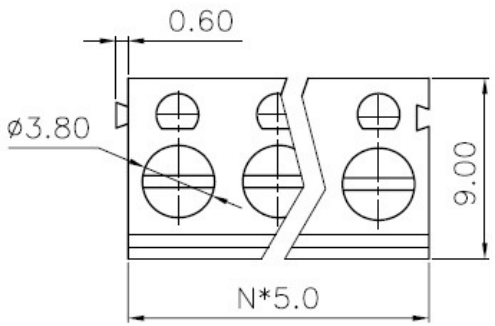

N=Number of contacts

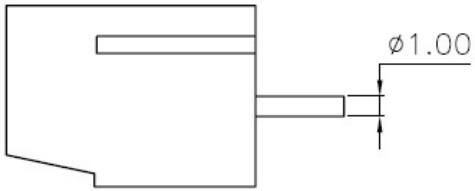

STRAIGHT TYPE

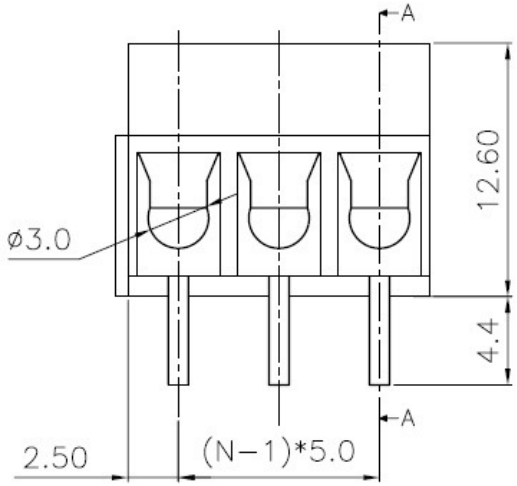

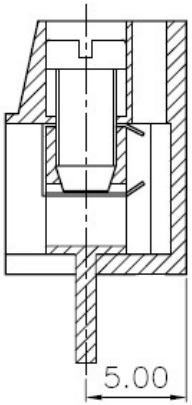

SECTION A−A

- MATERIAL
  SCREWS: M3 STEEL ZINC PLATED
  WIRE GUARD: PHOSPHOR BRONZE NI PLATED OR STAINLESS STEEL
  PIN HEADER: BRASS, TIN PLATED
  HOUSING: PBT, UL94V−0
- ELECTRICAL
  RATED VOLTAGE : 300V
  RATED CURRENT : 10A
  CONTACT RESISTANCE : 20mΩ
  INSULATION RESISTANCE : 5000MΩ/1000V
  WITHSTANDING VOLTAGE : AC1500V/1Min
  WIRE RANGE : 22−14AWG 2.5mm²
- MECHANICAL
  TEMP.RANGE : −30℃∽+120℃
  MAX SOLDERING : +250℃, FOR 5 SEC.
  TORQUE : 0.5Nm(4.5IB.IN)
  STRIP LENGTH : 4.5−5mm

PRODUCT NUMBER CODE:

F300 − X X

No.OF CONTACTS
02 03 08 16

PITCH5.0MM

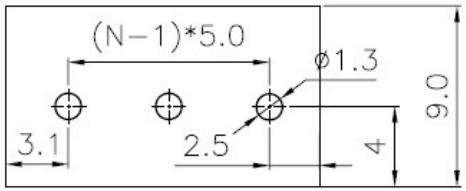

P.C.B.LAYOUT

GENERAL TOLERANCE		ANGLE TOLERANCE	
X.	±0.60	X.	±5'
.X	±0.38	.X	±3'
.XX	±0.25	.XX	±2'

DRAWING TYPE	CUSTOMER		
SCALE	1:1	SHEET	1 OF 1
DRAWING NO.	F300−XXXXX		

PROJECTION		TITLE	EURO TERMINAL BLOCKS PITCH5.0MM
UNITS	mm		
SHEET SIZE	A4	SERIES	F300 SERIES

TOPTEK

www.toptek-co.com