GROUNDING CABLE CLAMP
KMCC-1

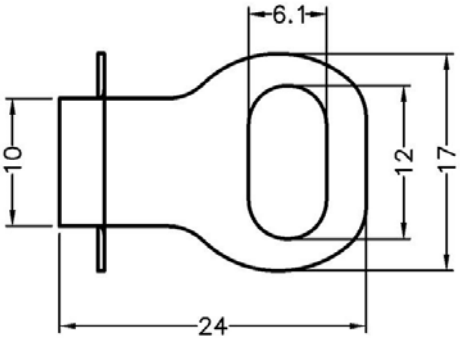

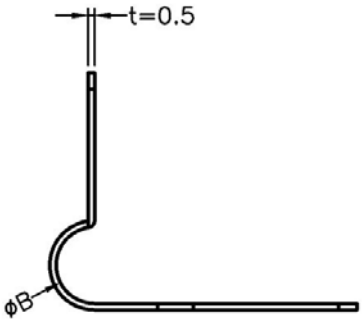

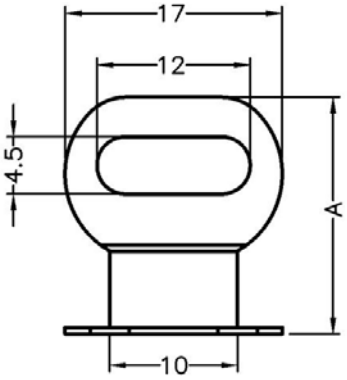

PART NO	A	B	PACKAGE
KMCC-1	18.55	6.0	500
KMCC-2	19.6	8.0	500

MATERIAL 1 : SPTE
UNIT : mm
Application :
PRODUCTS QRcode