TOPTEK®
HARDWARE ELECTRONIC COMPONENTS
www.toptek-co.com

RoHS 2002/95/EC

Pin Header 2.54mm Straight / Stack Straight / Kinked / Press Fit Type

Specifications
Current Rate:3 AMP
Insulation Resistance:1000MΩ Min.
Contact Resistance:20mΩ Max.
Dielectric Voltage:1000V AC for one minute
Operation Temperature:-40°C to +105°C

Material
Insulator:P.B.T or Hi-Temp. Thermoplastic, UL 94V-0
Terminal:Copper Alloy
Plating:Gold Plated

ORDER INFORMATION

P H 1 D X X - X X X X B A/L1/B - X

- D: D:Stack Straight Type
- Plastic Height: 15:H=1.5mm; 17:H=1.7mm; 25:H=2.5mm; (Triple only for 25mm)
- No. of Contact Per Row: 1:Single Row; 2:Dual Row; 3:Triple Row; H=1.5/1.7 (02~40) H=2.5 (02~50)
- Plating: ◎G:Gold Flash; GA:Gold 5u"; GB:Gold 10u"; GC:Gold 20u"; GD:Gold 30u"; S:Selective; SA:Selective 5u"; SB:Selective 10u"; SC:Selective 20u"; SD:Selective 30u"; T:Tin Plated; TE:Tin 200u"
- ◎B:Black insulator
- Fill in Dimension For Special Design
- L:RoHS + P.B.T; U:RoHS + Hi-Temp.; PH1FS only for L

◎:Standard Recommend

Pin Header 2.54mm

Pin Header 2.54mm 1 & 2 & 3 Row H=1.5/1.7/2.5mm Stack Straight Type

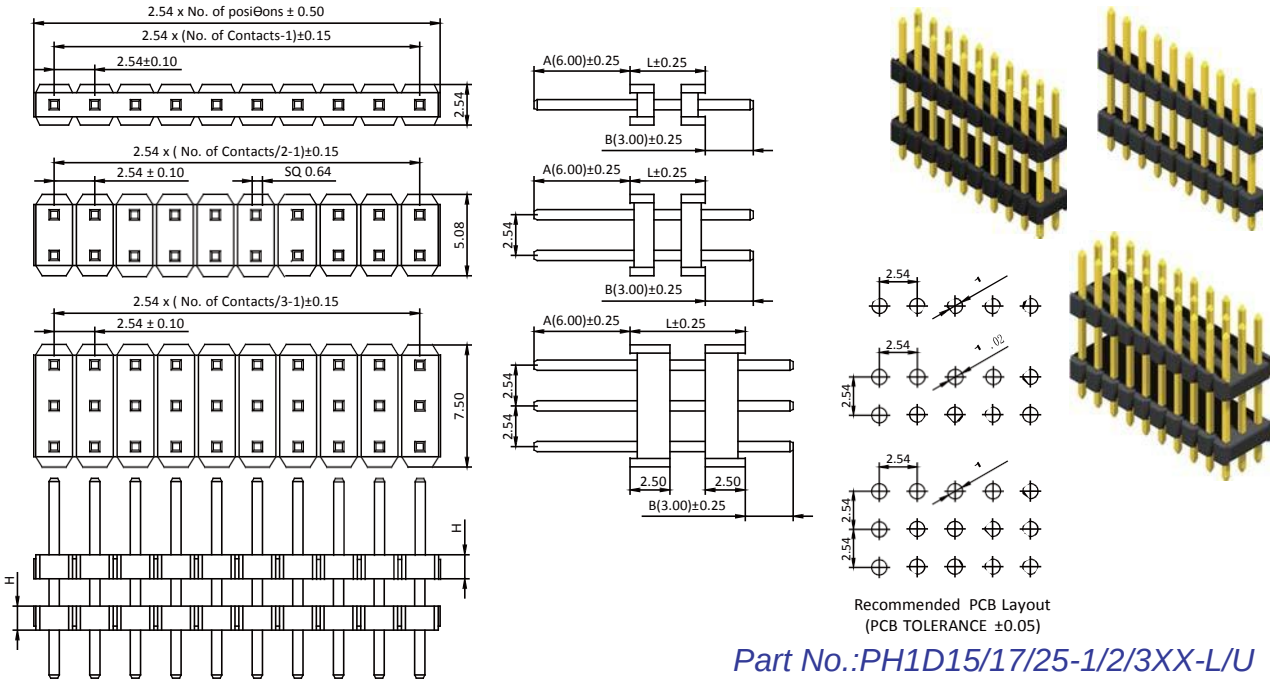

Part No.:PH1D15/17/25-1/2/3XX-L/U