PARTS HOUSING
PHC-13V0

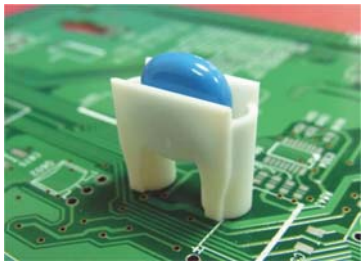

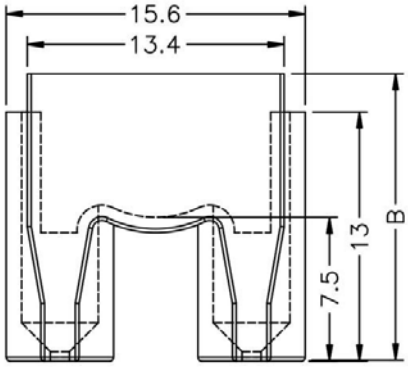

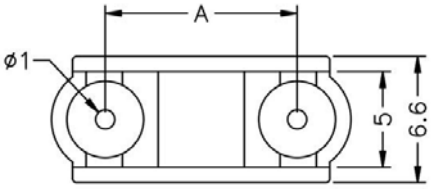

PART NO	A	B	PACKAGE
PHC-13V0	10.0	15.0	500

MATERIAL 1 : NYLON 66(UL)
FLAME CLASS 1 : 94V-0
COLOR 1 : NATURAL
UNIT : mm
Application : To protect and raise the parts.
Note: <none>